Honeywell

krom schroder

Butterfly valves BVG, BVA, BV..F, BVH, BVHR, BVHS, BVHM
Butterfly valves with actuator IBG, IBA, IB..F, IBH, IBHR, IBHS

TECHNICAL INFORMATION

- For gas, air, hot air and flue gas
- Low leakage rate and pressure loss
- High control accuracy
- BVG, BVGF, BVA, BVAF, IBG, IBGF, IBA or IBAF with reduced nominal diameters
- Butterfly valves available with mounted actuator
- IBH and BVHM are suitable for intermittent operation
- BVGF, BVAF, IBGF and IBAF work clearance-free
- Low-maintenance operation
- BVHR can be used in temperatures of up to 550°C
- BVG, BVGF: Suitable for hydrogen

CE EAC UK CA

EN
Edition 09.23
03250551

Contents

Contents 2
1 Application 4
1.1 BVG, BVA 4
1.2 BVGF, BVAF 5
1.3 BVH, BVHR, BVHS, BVHM 5
1.4 IBG, IBGF, IBA, IBAF, IBH, IBHR, IBHS 6
1.5 BVHM with MB 7 7
1.6 Application examples 8
1.6.1 IBG, IBGF, lambda correction 8
1.6.2 IBA, IBAF, adjusting the burner capacity 8
1.6.3 IBH, IBHR, hot air compensation 8
1.6.4 IBHS, emergency closing function in the event of a mains voltage failure 9
1.6.5 BVHM in intermittent mode 9
2 Certification 10
2.1 Certificate download 10
2.2 Declaration of conformity 10
2.3 UKCA certified 10
2.4 Eurasian Customs Union 10
2.5 REACH Regulation 10
2.6 China RoHS 10
3 Function 11
3.1 BVGF, BVAF: clearance-free 11
3.2 BVHM, BVHS: emergency closing function 11
4 Flow rate 12
4.1 Flow rate curves for BVG, BVGF, BVA, BVAF 13
4.1.1 k_V values for BVG, BVGF, BVA, BVAF 16
4.2 Flow rate curves for BVH, BVHR, BVHM, BVHS 17
4.2.1 k_V valvues for BVH, BVHR, BVHM, BVHS 18
4.3 Calculating the nominal size 18
5 Selection 19
5.1 Selection table for BVGF, BVA, BVAF, BVH, BVHM, BVHS 19
5.1.1 Type code BVA, BVG 20
5.1.2 Type code BVH 20
5.1.3 Type code BVHM 20
5.2 Selection table for IBG, IBGF, IBA, IBAF, IBH, IBHR, IBHS 21
5.2.1 Type code IB.. 22
5.3 Design of BVG, BVGF, BVA, BVAF 23
5.4 BVH, BVHR, BVHS, BVHM design 24
6 Project planning information 26
6.1 Installation 26
6.1.1 Installation position 26
6.2 Hot air as a medium 26
6.3 Hydrogen 27
6.4 Flow velocities in pipes 28
6.5 Actuator selection 29
7 Accessories 32
7.1 Adapter set for BVG, BVA 32
7.2 Fastening set 32
7.3 Adapter set IC 30 for BVA/BVG 33
7.4 Adapter set IC 50 for BVA/BVG 33
7.5 Heat deflector 33
7.6 Fastening set for BVHM 33
8 Technical data 34
8.1 Ambient conditions 34
8.2 Mechanical data 34
9 Dimensions 35
9.1 IBG/IBA (BVG/BVA + IC 20/IC 40) 35
9.2 IBGF/IBAF (BVGF/BVAF + IC 20/IC 40) 36
9.3 BVG and BVA with IC 30 37
9.4 IBH/IBHS (BVH/BVHS + IC 20/IC 40) 38
9.5 IBHR (BVHR + IC 20/IC 40) 39
9.6 MB 7 + BVHM 40

10 Converting units 41
11 Maintenance cycles 42
11.1 Maintenance 42
12 Glossary 43
12.1 Control characteristic, valve authority 43
12.2 Interpolation (linear) 43
12.3 Hot air compensation 43
12.4 Symbols in acc. with DIN EN 334/14382 and DVGW G 491 43
For more information 44

1 Application

The butterfly valves are designed to adjust volumes of gas, cold and hot air and flue gas on gas and air appliances and flue gas lines. They are designed for control ratios up to 10:1, and with the mounted actuator they are suitable for regulating flow rates for modulating-controlled or stage-controlled combustion processes.

1.1 BVG, BVA

BVG for gas, BVA for air.

BVG..H and BVA..H can also be supplied with manual adjustment.

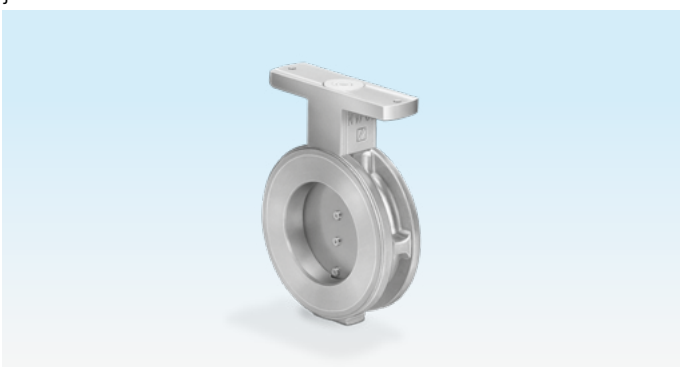

BVG, BVA

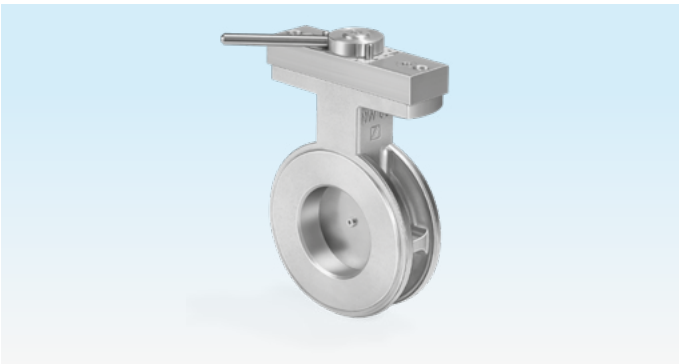

BVG..H, BVA..H

Butterfly valves BVG, BVGF, BVA and BVAF with reduced nominal diameter (reduced by one or two nominal sizes) can be used to achieve higher control accuracy. This will mean that complex reducing fittings will no longer be required.

Various adapter sets with square shaft, free shaft end or lever are available as accessories, see page 32 (7 Accessories). Flow rates can be set and fixed using a lever, for example to limit the high-fire rate on the burner. A scale indicates the set angle of opening.

1.2 BVGF, BVAF

Butterfly valves BVGF and BVAF work clearance-free. In case of change of direction, the butterfly valve adjusts to the setpoint without delay. The butterfly valve thus reaches the required position more quickly.

1.3 BVH, BVHR, BVHS, BVHM

Butterfly valve for hot air and flue gas.

Butterfly valve BVH, BVHR, BVHS is used for processes that require very precise adjustment of the flow rate or low leakage. In conjunction with the stop bar, the valve disc ensures very low leakage rates.

Using a spiral spring which compensates for the play in combination with the actuator IC 40, it is possible to move the valve disc to the required angle with almost zero hysteresis.

BVH, BVHS, BVHM

BVHR

BVHS

The butterfly valve BVHS with emergency closing function, see page 11 (3 Function), is used with the actuator IC 40S in systems where it is important that in the event of a mains voltage failure, the valve closes, preventing air streaming into the furnace without being under control.

In order to maximize the service life of the butterfly valve, the emergency closing function should be used only for the intended closing function and not for controlled shut-down or for intermittent switching of the burner.

BVH, BVHR

Butterfly valve BVH is suitable for applications up to 450°C. The BVHR can be used at a medium temperature of up to 550°C.

BVHM

Butterfly valve BVHM is used in intermittent mode. Solenoid actuator MB 7 is available as an actuator for the BVHM.

1.4 IBG, IBGF, IBA, IBAF, IBH, IBHR, IBHS

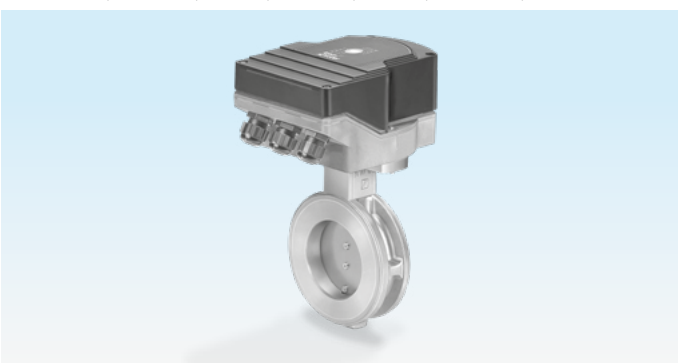

IBG, IBA

IBH, IBHS

IBHR

Butterfly valves BVG, BVGF, BVA, BVAF, BVH, BVHR or BVHS and actuators IC 20 or IC 40 can be delivered ready assembled as butterfly valves with actuator IBG, IBGF, IBA, IBAF, IBH, IBHR or IBHS.

For detailed information on the actuators, see Technical Information bulletins for actuators IC.. at www.docuthek.com.

For mounting the butterfly valve BVA, BVG to the actuator IC 30/IC 50, a respective adapter set will be available, see accessories, page 33 (7.3 Adapter set IC 30 for BVA/BVG), page 33 (7.4 Adapter set IC 50 for BVA/BVG).

1.5 BVHM with MB 7

Solenoid actuator MB 7 and butterfly valve BVHM are used in intermittent mode. The low- and high-fire rates can be adjusted independently of each other.

For detailed information on solenoid actuator MB 7, see Technical Information bulletin at www.docuthek.com.

1.6 Application examples

1.6.1 IBG, IBGF, lambda correction

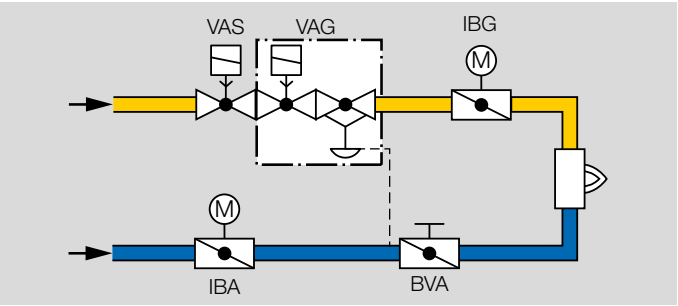

If the burner is to be operated with excess gas or air for reasons of process operation, the butterfly valve with actuator IBG can be used to correct the lambda value.

The butterfly valve BVA with manual adjustment is used to adjust the high-fire rate.

1.6.2 IBA, IBAF, adjusting the burner capacity

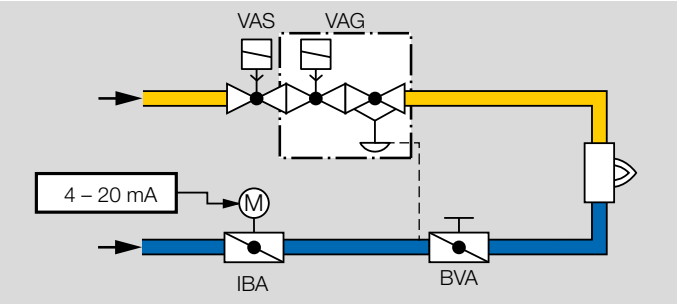

In pneumatic ratio control systems, the butterfly valve with mounted actuator IBA determines the air volume for the required burner capacity.

The butterfly valve BVA with manual adjustment is used to adjust the high-fire rate.

1.6.3 IBH, IBHR, hot air compensation

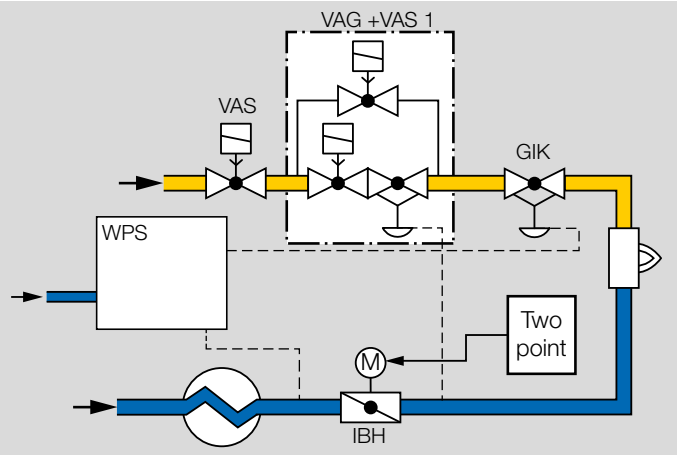

The butterfly valve with actuator IBH is used on burners that are operated with preheated combustion air at temperatures of up to 450°C (840°F).

Butterfly valve BVHR is available for medium temperatures of up to 550°C (1020°F).

Hot air compensation, see page 43 (12 Glossary).

1.6.4 IBHS, emergency closing function in the event of a mains voltage failure

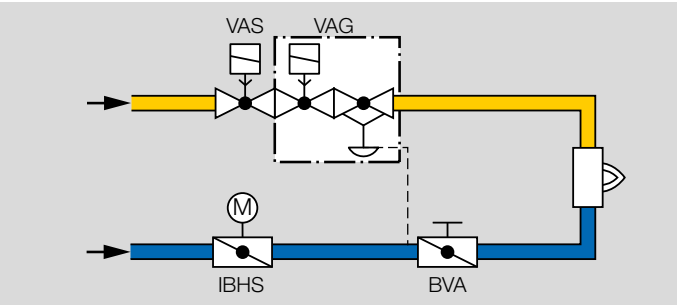

The emergency closing function ensures that in the event of a mains voltage failure, air cannot stream into the furnace without being under control.

The butterfly valve with actuator IBHS is used in the air circuit.

The butterfly valve BVA with manual adjustment is used to adjust the high-fire rate.

1.6.5 BVHM in intermittent mode

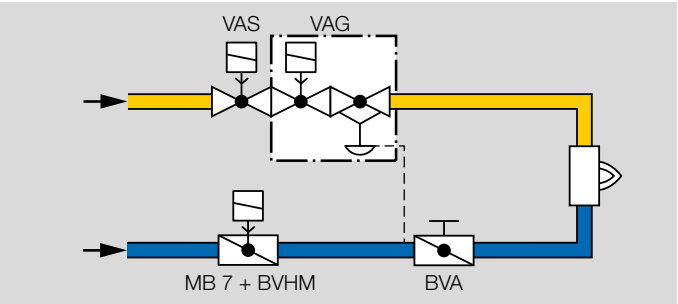

Solenoid actuator MB 7 and butterfly valve BVHM are used for intermittent switching of the burner.

The MB 7 is equipped with a flow rate adjustment device. The low- and high-fire rates are thus adjusted independently of each other.

Depending on the setting, the required leakage rate can be used as the low-fire rate. The BVHM allows an important reduction in the oxygen level of the furnace atmosphere in oxygen-critical applications such as on forging furnaces. This allows suppression of undesirable scale formation on the material to be treated.

2 Certification

2.1 Certificate download

Certificates – see www.docuthek.com

2.2 Declaration of conformity

CE

We, the manufacturer, hereby declare that the products BVG, BVGF, BVA, BVAF with product ID No. CE-0063BM1154 comply with the requirements of the listed Directives and Standards.

Directives:

- 2011/65/EU – RoHS II
- 2015/863/EU – RoHS III

Regulation:

- (EU) 2016/426 – GAR

Standards:

- EN 161:2011+A3:2013

The relevant product corresponds to the tested type sample.

The production is subject to the surveillance procedure pursuant to Regulation (EU) 2016/426 Annex III paragraph 3.

Elster GmbH

2.3 UKCA certified

BVG, BVGF, BVA, BVAF

UK CA

Gas Appliances (Product Safety and Metrology etc. (Amendment etc.) (EU Exit) Regulations 2019)

BS EN 161:2011+A3:2013

2.4 Eurasian Customs Union

EAC

The products BVG/BVGF/BVA/BVAF/BVH/BVHR/BVHS/BVHM meet the technical specifications of the Eurasian Customs Union.

2.5 REACH Regulation

The device contains substances of very high concern which are listed in the Candidate List of the European REACH Regulation No. 1907/2006. See Reach list HTS atwww.docuthek.com.

2.6 China RoHS

Directive on the restriction of the use of hazardous substances (RoHS) in China. Scan of the Disclosure Table China RoHS2, see certificates at www.docuthek.com.

3 Function

The butterfly valves are designed on the basis of the free-flow principle (no deflection of the flow). They release a cross-section for the flowing medium, depending on a rotary movement between 0 and 90°.

The butterfly valves BVG, BVGF, BVA and BVAF are with valve disc clearance. The valve disc of the butterfly valves BVH, BVHR, BVHS, BVHM features a sheet metal spring (TWINDISK®) and, together with the mechanical stop bar, ensures very low leakage.

BVG, BVGF, BVA, BVAF, BVH, BVHR and BVHS are specifically designed to fit the actuators IC. The butterfly valves feature very easy action. Consequently, the actuator requires only a low torque.

BVHM is tailored to the solenoid actuator MB 7.

3.1 BVGF, BVAF: clearance-free

The spiral spring always pushes the valve disc in the direction of closing. Any clearance between the actuator and the valve disc is eliminated and the control command is executed without delay.

3.2 BVHM, BVHS: emergency closing function

The butterfly valves BVHM, BVHS feature an emergency closing function. They are used in systems where it is important that in the event of a mains voltage failure, the valve closes, preventing air streaming into the furnace without being under control.

A pre-tensioned spiral spring moves the valve disc against the mechanical stop of the butterfly valve in the event of a solenoid valve/motor defect, within the closing time.

The emergency closing function of butterfly valve BVHS is possible only in conjunction with the actuator IC 40S.

4 Flow rate

The characteristic curves below are measured at 15°C (59°F) with a measurement set-up in accordance with the standards EN 13611/EN 161.

This involves measuring the pressure 5 × DN upstream and downstream of the unit under test. The pressure drop of the pipe is also measured but is not compensated for.

Left curve: Leakage volume at a 0° opening angle.

Right curve: Max. flow rate at a 90° opening angle.

4.1 Flow rate curves for BVG, BVGF, BVA, BVAF

With full bore = nominal diameter

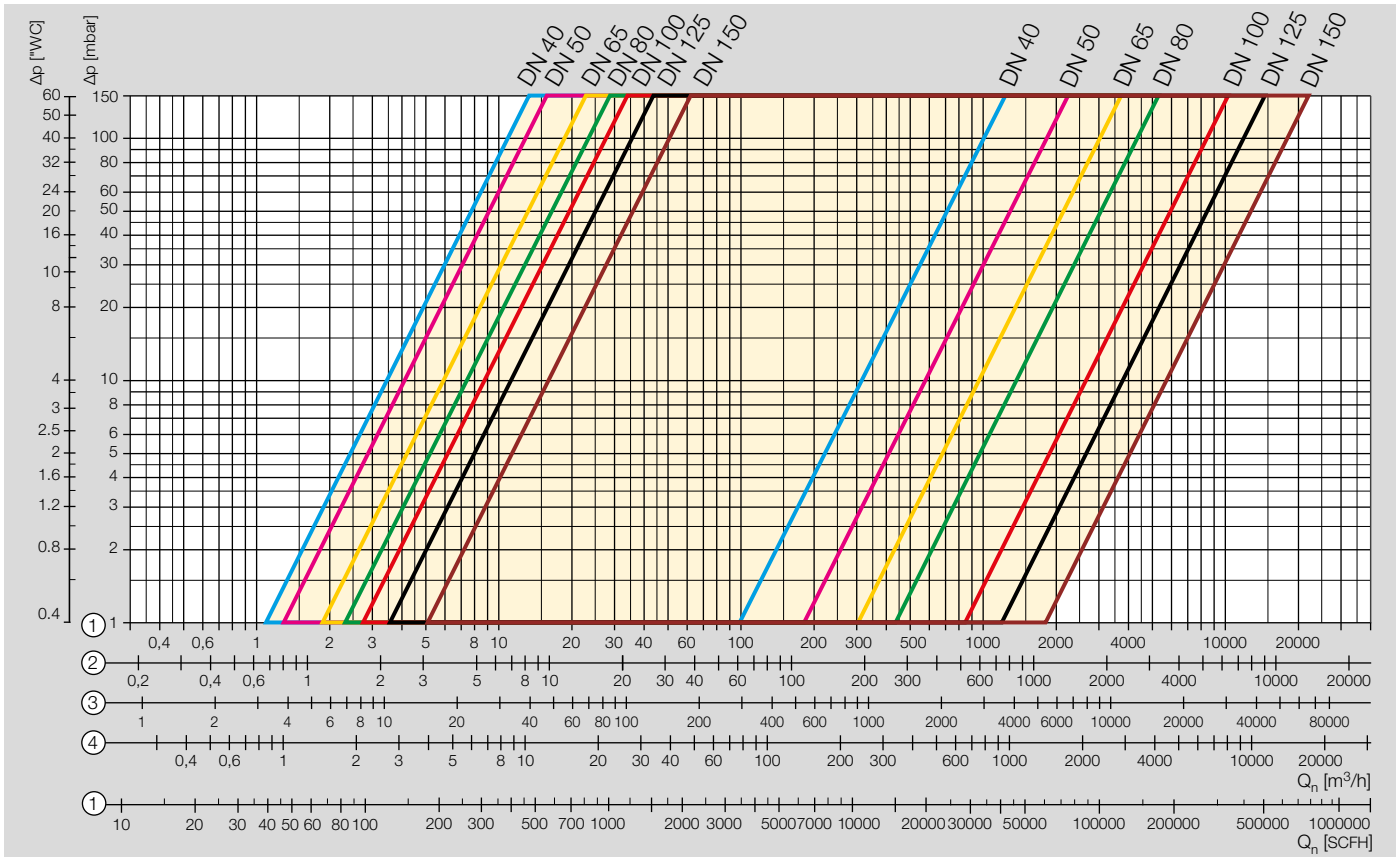

1 = natural gas (ρ = 0.80 kg/m³)
2 = propane (ρ = 2.01 kg/m³)
3 = hydrogen (ρ = 0.09 kg/m³)
4 = air (ρ = 1.29 kg/m³)

With 1 × reduced bore

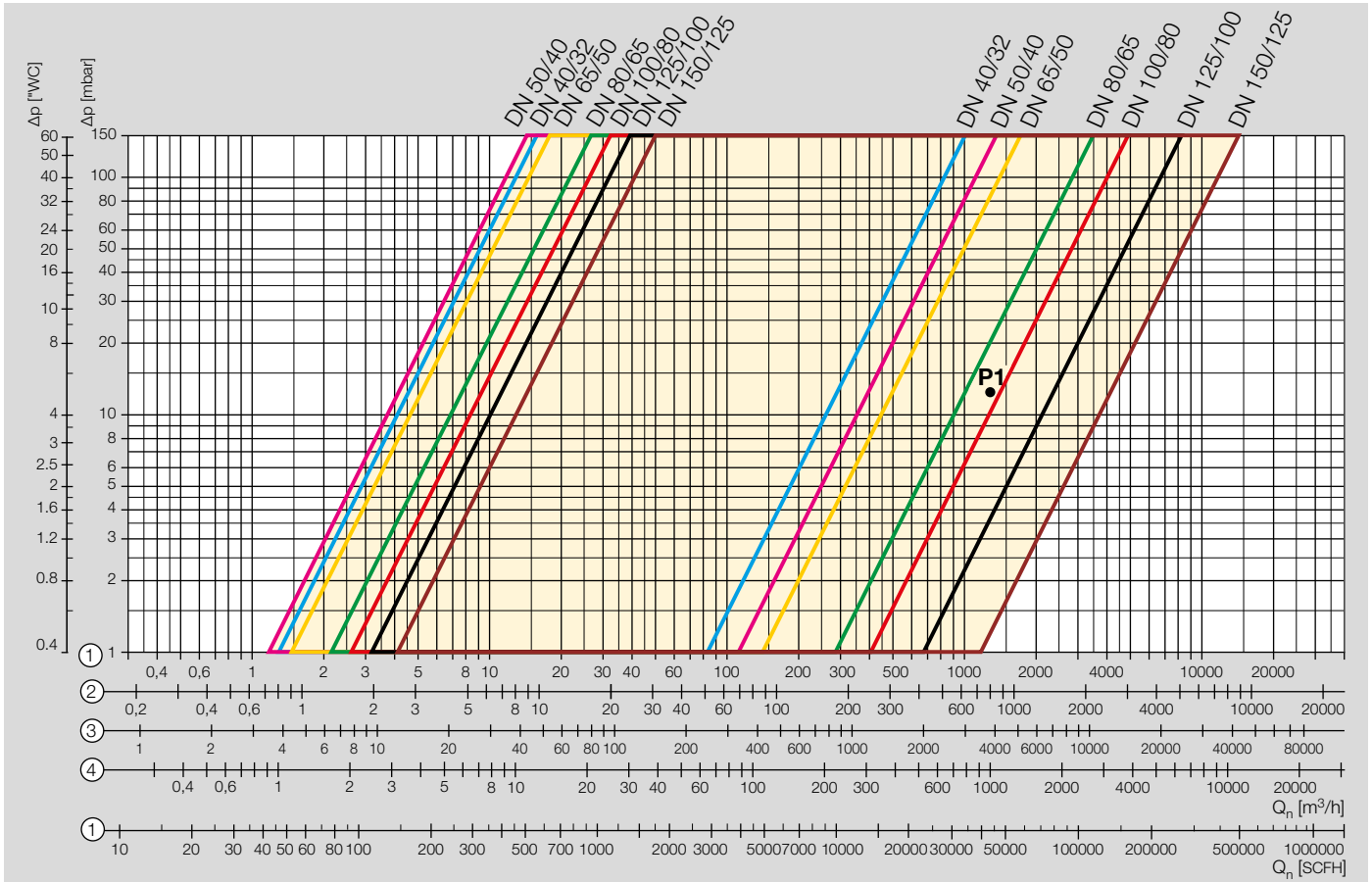

1 = natural gas (ρ = 0.80 kg/m³)
2 = propane (ρ = 2.01 kg/m³)
3 = hydrogen (ρ = 0.09 kg/m³)
4 = air (ρ = 1.29 kg/m³)

With 2 × reduced bore

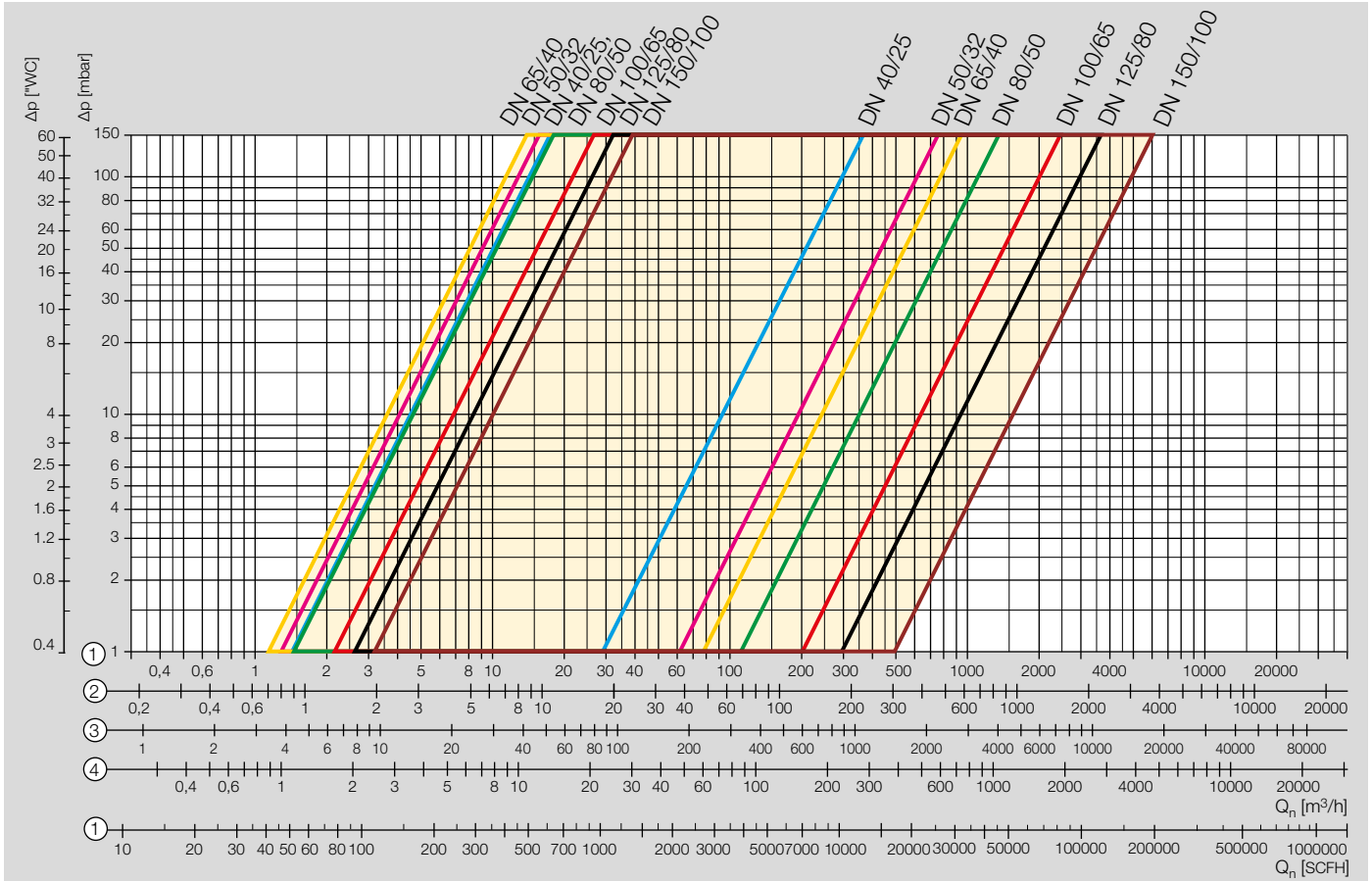

1 = natural gas (ρ = 0.80 kg/m³)
2 = propane (ρ = 2.01 kg/m³)
3 = hydrogen (ρ = 0.09 kg/m³)
4 = air (ρ = 1.29 kg/m³)

4.1.1 k_V values for BVG, BVGF, BVA, BVAF

With full bore = nominal diameter

	Opening angle									
	0°	10°	20°	30°	40°	50°	60°	70°	80°	90°
BVG/BVGF/BVA/BVAF 40	1.0	1.5	3.6	7.3	13	23	37	56	77	90
BVG/BVGF/BVA/BVAF 50	1.2	1.6	4.0	9.3	17	31	51	82	123	167
BVG/BVGF/BVA/BVAF 65	1.7	2.7	7.3	16	32	57	94	144	210	281
BVG/BVGF/BVA/BVAF 80	2.1	3.2	9.8	24	47	83	132	202	296	405
BVG/BVGF/BVA/BVAF 100	2.5	3.4	12	33	59	133	214	331	517	792
BVG/BVGF/BVA/BVAF 125	3.4	7.4	25	78	145	244	385	583	910	1,132
BVG/BVGF/BVA/BVAF 150	4.7	13	58	132	229	369	583	882	1,557	1,696

With 1 × reduced bore

BVG/BVGF/BVA/BVAF 40/32	1.2	1.4	2.8	5.4	9.5	16	27	41	57	63
BVG/BVGF/BVA/BVAF 50/40	1.1	1.5	3.2	7.1	13	21	34	52	73	90
BVG/BVGF/BVA/BVAF 65/50	1.3	1.6	4.3	9.5	17	29	46	68	97	120
BVG/BVGF/BVA/BVAF 80/65	2.0	2.4	7.0	16	31	55	89	132	185	243
BVG/BVGF/BVA/BVAF 100/80	2.4	3.3	9.8	23	49	88	140	203	275	335
BVG/BVGF/BVA/BVAF 125/100	2.9	5.2	17	48	103	173	262	364	478	561
BVG/BVGF/BVA/BVAF 150/125	3.8	6.6	25	89	180	288	422	586	771	940

With 2 × reduced bore

BVG/BVGF/BVA/BVAF 40/25	1.3	1.3	2.2	3.9	6.6	11	16	20	24	27
BVG/BVGF/BVA/BVAF 50/32	1.2	1.4	2.8	5.4	9.6	16	26	38	50	56
BVG/BVGF/BVA/BVAF 65/40	1.1	1.5	3.3	7.1	13	20	32	46	61	71
BVG/BVGF/BVA/BVAF 80/50	1.3	1.6	4.0	9.0	16	28	44	64	85	101
BVG/BVGF/BVA/BVAF 100/65	2.0	2.9	7.7	17	32	55	86	122	162	185
BVG/BVGF/BVA/BVAF 125/80	2.4	3.4	8.7	22	47	85	133	185	237	273
BVG/BVGF/BVA/BVAF 150/100	2.9	4.2	15	42	95	160	237	319	397	458

4.2 Flow rate curves for BVH, BVHR, BVHM, BVHS

With full bore = nominal diameter

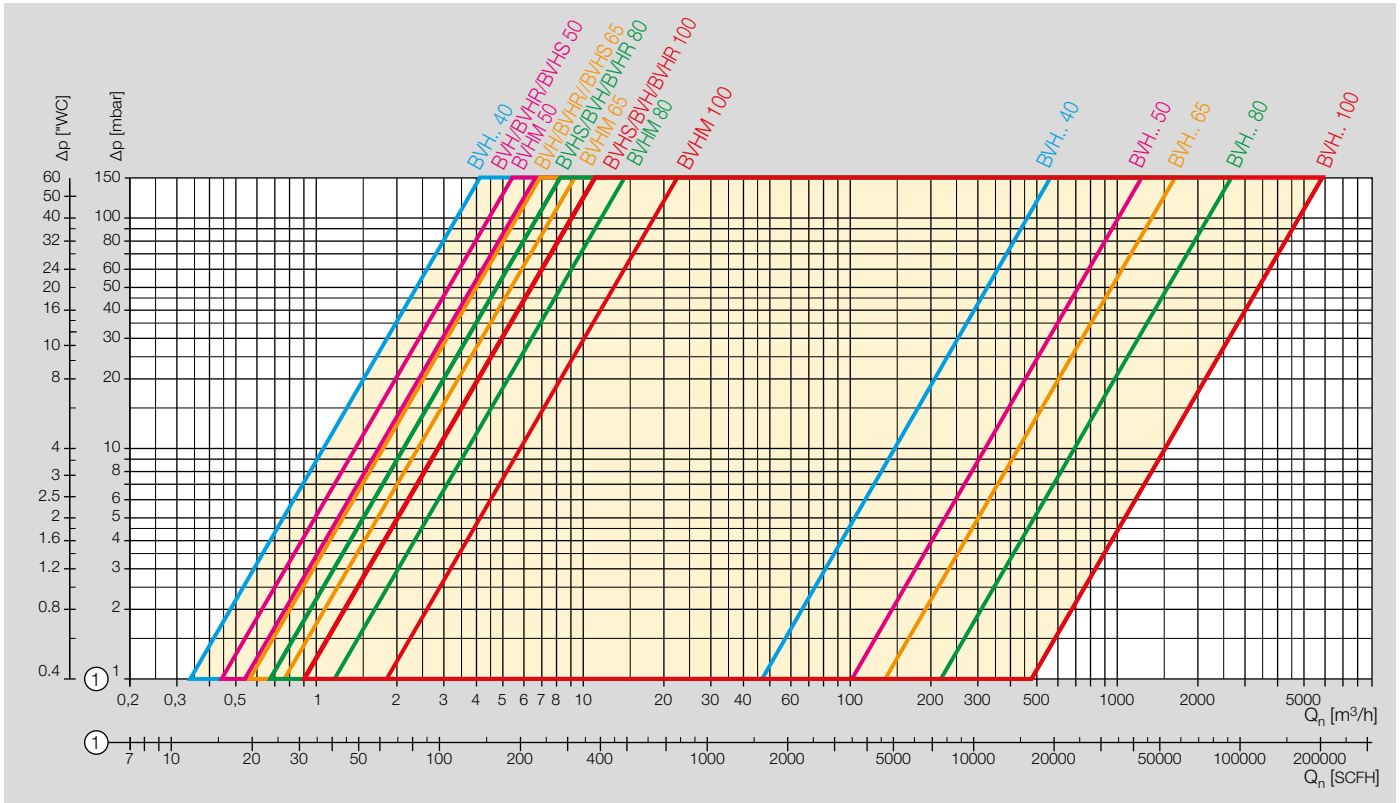

1 = air (ρ = 1.29 kg/m³)

4.2.1 k_V valves for BVH, BVHR, BVHM, BVHS

		Opening angle								
	0°	10°	20°	30°	40°	50°	60°	70°	80°	90°
BVH/BVHR/BVHS 40	0.4	6.4	12	18	24	31	38	47	53	55
BVH/BVHR/BVHS 50	0.5	10	19	29	40	56	73	95	116	120
BVH/BVHR/BVHS 65	0.7	12	21	32	48	67	92	128	156	160
BVH/BVHR/BVHS 80	0.8	20	34	52	73	103	143	192	238	250
BVH/BVHR/BVHS 100	1.1	27	47	74	111	170	255	374	525	560

BVHM 40	0.4	6.4	12	18	24	31	38	47	53	55
BVHM 50	0.5	10	19	29	40	56	73	95	116	120
BVHM 65	0.7	12	21	32	48	67	92	128	156	160
BVHM 80	1.1	20	34	52	73	103	143	192	238	250
BVHM 100	2.1	27	47	74	111	170	255	374	525	560

4.3 Calculating the nominal size

A web app for calculating the nominal size is available at www.adlatus.org.

5 Selection

5.1 Selection table for BVGF, BVA, BVAF, BVH, BVHM, BVHS

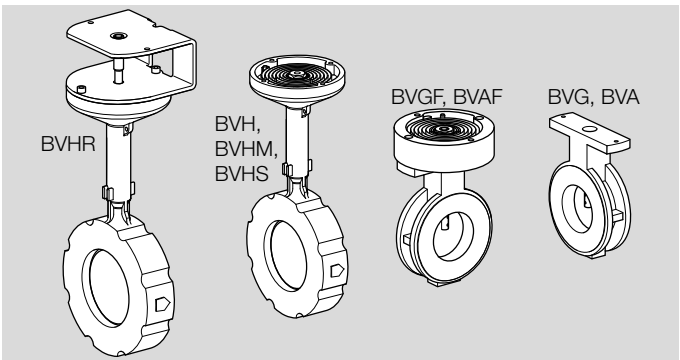

Option	BVA	BVG[1)]	BVH	BVHS	BVHR	BVHM
Clearance-free	F	F				
Nominal size	40, 50, 65, 80, 100, 125, 150	40, 50, 65, 80, 100, 125, 150	40, 50, 65, 80, 100	40, 50, 65, 80, 100	40, 50, 65, 80, 100	40, 50, 65, 80, 100
Reduced nominal diameter	/25, /40, /50, /65, /80, /100, /125	/25, /40, /50, /65, /80, /100, /125				
Pipe connection	Z	Z, W	Z, W	Z, W	Z, W	Z, W
Inlet pressure p_u	05	05	01	01	01	01
With stop bar			A	A	A	A
With manual adjustment With free shaft end With square shaft	H, F, V	H, F, V				

1) BVG..W, BVGF..W: nominal sizes DN 40 to 100 available with ANSI flange and reduced to /25 to /80.

Order example

BVGF 100/80W05

5.1.1 Type code BVA, BVG

BVG	Butterfly valve for gas
BVA	Butterfly valve for air
F	Clearance-free
40-150	Nominal size
/25-/125	Reduced to nominal size
Z	For fitting between two EN flanges
W[1)]	For fitting between two ANSI flanges
05	p_u max. 500 mbar, Δp max. 150 mbar
H	With manual adjustment
F	With free shaft end
V	With square shaft

1) BVG..W, BVGF..W: nominal sizes DN 40 to 100 available with ANSI flange and reduced to /25 to /80

5.1.2 Type code BVH

BVH	Butterfly valve for air and flue gas
BVHS[1)]	Like BVH, but with additional emergency closing function
BVHR	Like BVH, for medium temperatures of up to 550°C
40–100	Nominal size
Z	For fitting between two EN flanges
W	For fitting between two ANSI flanges
01	p_u max. 150 mbar
A	With stop

1) BVHS can only be combined with IC 40S

5.1.3 Type code BVHM

BVHM	Butterfly valve for air and flue gas
40-100	Nominal size
T	T-product
Z	For fitting between two EN flanges
W	For fitting between two ANSI flanges
01	p_u max. 150 mbar
A	With stop

5.2 Selection table for IBG, IBGF, IBA, IBAF, IBH, IBHR, IBHS

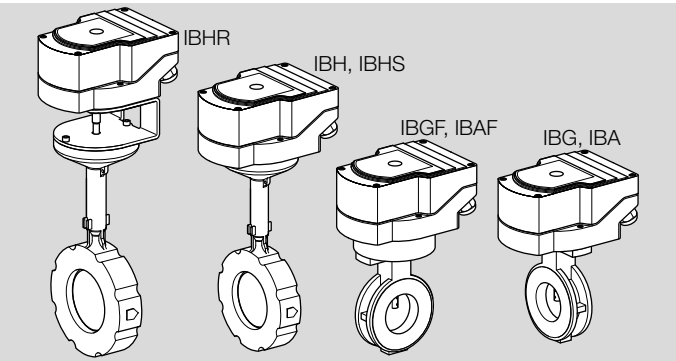

Option	IBA, IBAF	IBG[4], IBGF[4]	IBH, IBHR	IBHS
Nominal size	40, 50, 65, 80, 100, 125, 150	40, 50, 65, 80, 100, 125, 150	40, 50, 65, 80, 100	40, 50, 65, 80, 100
Reduced nominal diameter	/25, /40, /50, /65, /80, /100, /125	/25, /40, /50, /65, /80, /100, /125		
Pipe connection	Z	Z, W	Z, W	Z, W
Inlet pressure p_u	05	05	01	01
With stop bar			A	A
Actuator	/20, /40	/20, /40	/20, /40	/40
Running time[1]	-07, -15, -30, -60	-07, -15, -30, -60	-07, -15, -30, -60	
Mains voltage	W, Q, A	W, Q, A	W, Q, A	A
Torque[2]	2, 3	2, 3	2, 3	2
IC 20 control IC 40 control	E, T, A, D	E, T, A, D	E, T, A, D	 A, D
Feedback potentiometer[3]	R10	R10	R10	R10

[1] Only in conjunction with IC 20 (IC 40: programmable between 4.5 and 76.5 s).

[2] IC 20-07: 2.5 Nm, IC 20-15/-30/-60: 3.0 Nm, IC 40: 2.5 Nm, IC 40..S: 3 Nm.

[3] Can be retrofitted on IC 20. If "none", this specification is omitted.

[4] IBG..W, IBGF..W: nominal sizes DN 40 to 100 available with ANSI flange and reduced to /25 to /80.

Order example

IBA 50Z05/20-15W3T

5.2.1 Type code IB..

IBG	Actuator IC 20 or IC 40 + BVG
IBGF	Actuator IC 20 or IC 40 + BVGF
IBA	Actuator IC 20 or IC 40 + BVA
IBAF	Actuator IC 20 or IC 40 + BVAF
IBH[1)]	Actuator IC 20 or IC 40 + BVH
IBHR[1)]	Actuator IC 20 or IC 40 + BVHR
IBHS[1)]	Actuator IC 20 or IC 40 + BVHS
40–150	BVG.., BVA.. nominal size
40–100	BVH.. nominal size
/25–/125	Reduced to nominal size
Z	For fitting between two EN flanges
W[2)]	For fitting between two ANSI flanges
01	BVH..: p_u max. 150 mbar (2.18 psi)
05	BVG.., BVA..: p_u max. 500 mbar (7.25 psi)
A	BVH..: with stop bar
/20	Actuator IC 20
/40	Actuator IC 40
-07	Running time (at 50 Hz): 7.5 s
-15	Running time (at 50 Hz): 15 s
-30	Running time (at 50 Hz): 30 s
-60	Running time (at 50 Hz): 60 s
W	Mains voltage 230 V AC, 50/60 Hz
Q	Mains voltage 120 V AC, 50/60 Hz
A	Mains voltage 120-230 V AC, 50/60 Hz
2	Torque 2.5 Nm
3	Torque 3 Nm
E	Continuous control
T	Three-point step control
A	4–20 mA analogue input and digital input
D	Digital input
R10	With 1000 Ω feedback potentiometer

1) IBH.. available up to nominal size DN 100

2) IBG..W, IBGF..W: nominal sizes DN 40 to 100 available with ANSI flange and reduced to /25 to /80

5.3 Design of BVG, BVGF, BVA, BVAF

Legend	
$\Delta p_{100\%}$	Pressure drop when valve fully opened (90°)
$Q_{min.}$	Leakage rate when valve closed (Δp 0° = p_u)
a	Valve authority (recommended value: 0.3)
$\measuredangle$	Opening angle at entered $\Delta p_{max.}$
v	Flow velocity

Δp on the butterfly valve is determined using the control characteristic a, see page 43 (12 Glossary), and the outlet pressure p_d for normal operation.

$$a = \Delta p_{100\,\%} / p_u$$

A control characteristic of a = 0.3 provides good control properties.

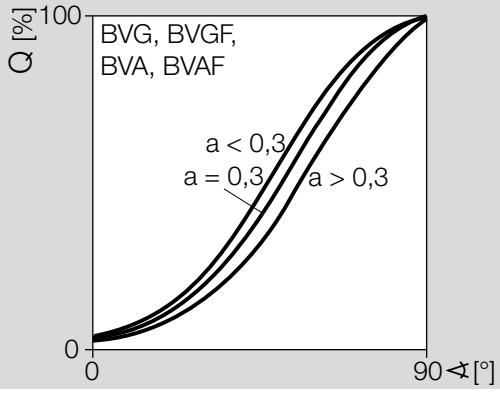

Example

We want to find $\Delta p_{100\%}$ in order to select the nominal size DN of the butterfly valve BVA for air to be used for modulating control of a gas burner:
Outlet pressure: p_d = 30 mbar

Air flow rate at standard conditions: Q_n = 1000 m³/h
Control characteristic: a = 0.3

$$\Delta p_{100\,\%} = \frac{a \times p_d}{1 - a}$$

$$\Delta p_{100\,\%} = \frac{0{,}3 \times 30\ \text{mbar}}{1 - 0{,}3} = 12{,}9\ \text{mbar} = 13\ \text{mbar}$$

The flow velocity in the pipes exercises a considerable influence on the pressure loss and the noise development. When designing the butterfly valve, it is recommended that the flow velocity of 30 m/s (5905 ft/min) is not exceeded, see page 28 (6.4 Flow velocities in pipes).

A flow rate at standard conditions Q_n = 1000 m³/h results in a pipe of DN 100.

Select the required nominal size from the flow rate diagram on the basis of the desired flow rate Q_n and the calculated $\Delta p_{100\%}$.

Result

A butterfly valve with 1 × reduced bore is selected in order to obtain the pressure loss $\Delta p_{100\%}$ = 13 mbar that has been calculated taking into account the selected nominal size DN = 100.

Nominal size BVA 100/80 – see **P1**, page 13 (4.1 Flow rate curves for BVG, BVGF, BVA, BVAF)

5.4 BVH, BVHR, BVHS, BVHM design

We want to find a butterfly valve BVH for staged control of a gas burner. In order to regulate accurately between loads, the opening angle for high-fire and low-fire rates is calculated using the k_V value.

Selecting the opening angle for high-fire rate HF

$$a = \Delta p_{100\,\%} / p_u$$

A control characteristic of a = 0.3 provides good control properties.

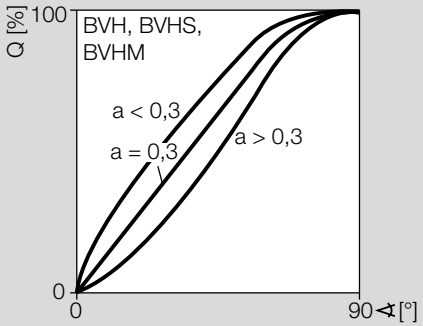

Example

Outlet pressure for high-fire rate: $p_{d\,HF}$ = 30 mbar
Outlet pressure $p_{d\,HF\,absolute}$ = 1.013 + 0.030 = 1.043 bar
High-fire flow rate at standard conditions: $Q_{n\,HF}$ = 430 m³/h
Density ρ_n for air: 1.29 kg/m³
Air temperature: 35°C (95°F)
Control characteristic: a = 0.3

$$\Delta p_{HF} = \frac{a \times p_d}{1 - a}$$

$$\Delta p_{Gr} = \frac{0{,}3 \times 30\ \text{mbar}}{1 - 0{,}3} = 13\ \text{mbar} = 0{,}013\ \text{bar}$$

$$k_v = \frac{Q_{(n)}}{514} \cdot \sqrt{\frac{\rho_n \cdot T}{\Delta p_{HF} \cdot p_{d\,HF\,absolute}}}$$

$T_{absolute}$ = 35 + 273 K = 308 K

$$k_v = \frac{430}{514} \cdot \sqrt{\frac{1{,}293 \cdot 308}{0{,}013 \cdot 1{,}043}}$$

k_V = 144

Select the next largest k_V value in the k_V values table for the BVH, BVHS design, allowing for the maximum opening angle. An opening angle greater than 60° should be selected in order to achieve a higher turndown.

For example, the selected k_V value for butterfly valve BVH of nominal size DN 65 with 80° opening is 156, see page 17 (4.2 Flow rate curves for BVH, BVHR, BVHM, BVHS) and page 18 (4.2.1 kV valvues for BVH, BVHR, BVHM, BVHS).

The ranges between the opening angles, which are listed in the k_V values table in 10° steps, can be considered as linear. After linear interpolation of the k_V values between 70° and 80°, the selected opening angle of the butterfly valve BVH for high-fire rate is:
k_V = 145 and approx. 76°.

Then check the flow velocity: max. 30 m/s.

Selecting the opening angle for low-fire rate LF

With a turndown of 1:10, this results in a low-fire flow rate at standard conditions of
$Q_{n\,LF}$ = 43 m³/h/10 = 4.3 m³/h and an outlet pressure of
$p_{d\,LF}$ = 30 mbar/10² = 0.3 mbar.

The inlet pressure p_u is the same for low-fire and high-fire rates.

$p_u = p_{d\,HF} + \Delta p_{HF}$ = 30 mbar + 13 mbar = 43 mbar,
inlet pressure $p_{u\,absolute}$: 1.013 bar + 0.043 bar = 1.056 bar.

Outlet pressure for low-fire rate $p_{d\ LF}$ = 0.3 mbar,
outlet pressure $p_{d\ LF\ absolute}$: 1.013 bar + 0.0003 bar = 1.0133 bar.

Δp_{LF} for low-fire rate:
$p_u - p_{d\ LF}$ = 43 mbar - 0.3 mbar = 42.7 mbar = 0.0427 bar.

$$k_v = \frac{Q_{(n)}}{514} \cdot \sqrt{\frac{\rho_n \cdot T}{\Delta p_{LF} \cdot p_{d\ LF\ absolute}}}$$

$$k_v = \frac{43}{514} \cdot \sqrt{\frac{1{,}293 \cdot 308}{0{,}0427 \cdot 1{,}0133}}$$

k_V = 8.03

Select a similar k_V value in the k_V values table for the BVH, BVHR, BVHS design. For a 10° opening angle, the selected k_V value is 12.

After linear interpolation of the k_V values between 0 and 10°, the selected opening angle of the butterfly valve BVH for the low-fire rate is: k_V = 8 and approx. 6°.
The opening angle in the low-fire rate range should not be less than 2° in order to achieve good control properties.

Result

The opening angle for the butterfly valve BVH of DN 65 and turndown 1:10 is 6° in the low-fire rate range and 76° in the high-fire rate range.

6 Project planning information

6.1 Installation

The butterfly valve is intended to be installed in-between two flanges.

The length of the inlet and outlet section should be 2 x DN.

When designing the butterfly valve, it is recommended that the flow velocity of 30 m/s (5905 ft/min) is not exceeded, see page 28 (6.4 Flow velocities in pipes).

If pipe fittings (reducing fittings) are installed in the pipework, the additional pressure loss must be taken into account.

Butterfly valves BVG, BVGF, BVA, BVAF, BVH, BVHR and BVHS and actuators IC are supplied separately or assembled. Easy assembly with the actuator using 2 screws can be carried out either before or after installation of the butterfly valve in the pipework.

The butterfly valve BVHM and the solenoid actuator MB 7 are delivered separately. Easy assembly with the solenoid actuator using the installation set can be carried out either before or after installation of the butterfly valve in the pipework.

6.1.1 Installation position

The actuator must be installed in the vertical or horizontal position, not upside down.
BVHR/IBHR: always position the actuator to the side of the pipe.

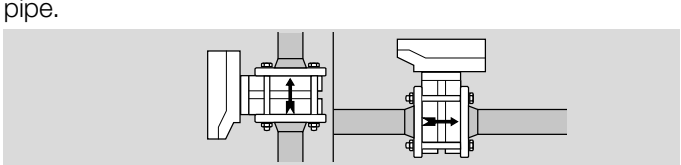

We recommend installing the butterfly valve in the vertical position with the direction of flow from bottom to top in order to prevent condensation and to prevent dirt from accumulating on the stop bar in the case of butterfly valves with stop bar (BVH..A).

6.2 Hot air as a medium

» If the valve is used with hot air, the pipe should be adequately insulated so as to reduce the ambient temperature. The flanges and the butterfly valve must be kept free of insulating material. Ensure that there is sufficient installation space around the flanges to access the screw connectors.

» For a better dissipation of heat, turn the butterfly valve when installing so that the actuator is positioned to the side of the pipe. This also avoids that rising hot air circulates around the actuator.

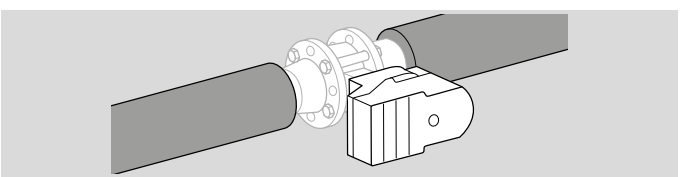

» Check the temperature resistance of the seals.

» Use heat deflectors for a medium temperature of > 250°C, see accessories.

In conjunction with butterfly valves BVH, BVHS or BVHM for hot air, the actuators can be used in temperatures of up to 250°C (480°F); with additional heat deflectors, they can be used in temperatures of up to 450°C (840°F).

Butterfly valve BVHR is available for medium temperatures of up to 550°C (1020°F). Always position the actuator to the

side of the pipe. Installation in any other position would lead to the actuator being damaged due to high heat emissions. It is not necessary to install a heat deflector on the BVHR.

6.3 Hydrogen

Other hydrogen-compatible products can be found here: Technical Information, Products for hydrogen.

6.4 Flow velocities in pipes

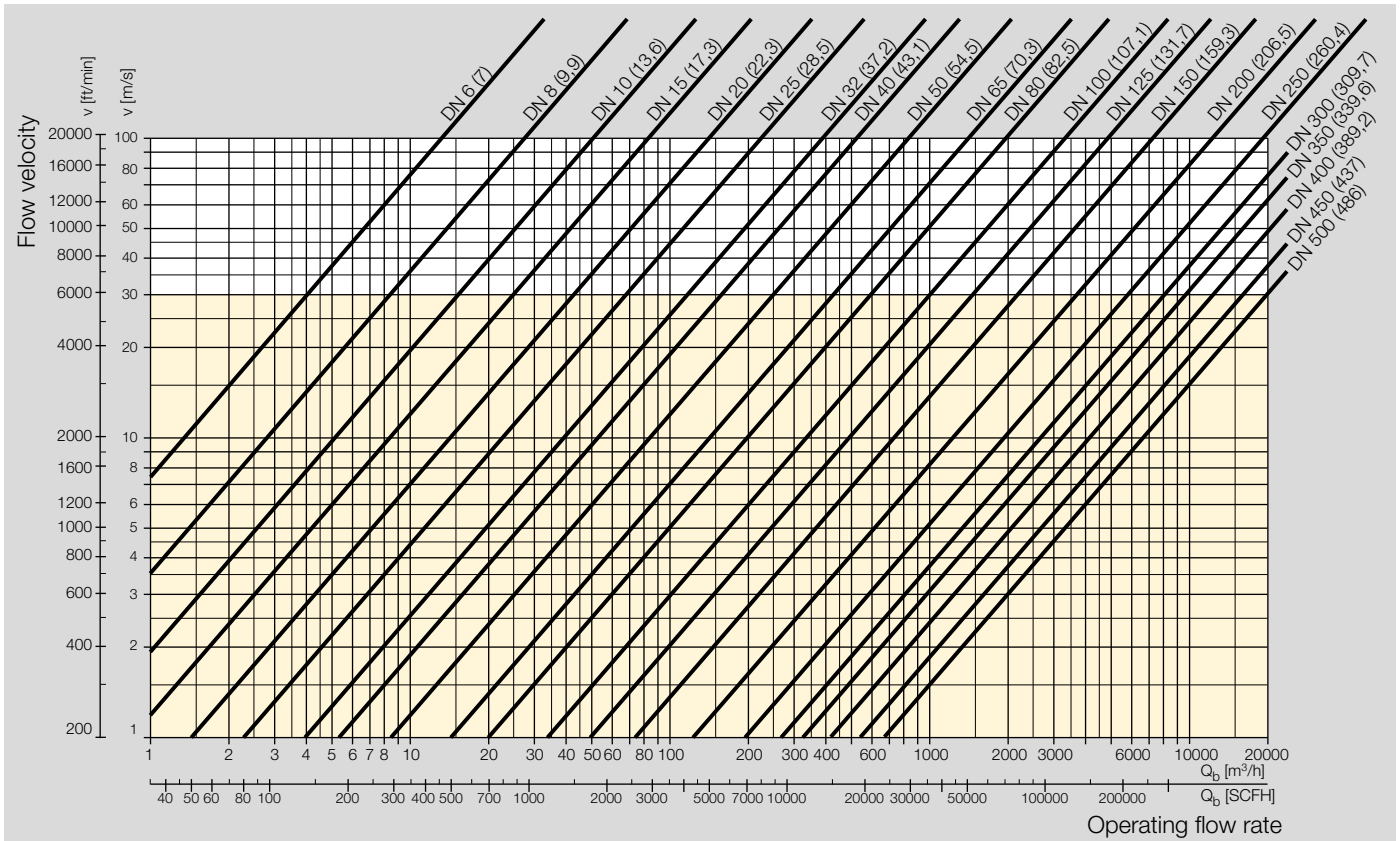

It is recommended that flow velocities of 30 m/s (5905 ft/min) are not exceeded when using the valve on thermoprocessing equipment.

The details on the internal diameter correspond to the conventional dimensions for gas pipes as stipulated in the DIN standards DIN 2440 and DIN 2450. Different cross-sections will result in flow velocities that differ correspondingly.

6.5 Actuator selection

Butterfly valves BVG, BVGF, BVA, BVAF, BVH and BVHR are controlled by actuator IC 20, IC 30 or IC 40.

Butterfly valve BVHS is controlled by actuator IC 40S.

Butterfly valve BVHM is controlled by solenoid actuator MB 7.

IC 20, IC 30, IC 40

The characteristic curves relate to the maximum torque produced by the flow rate. In general, maximum torque is reached at approx. 70°.

$\Delta p_{100\%}$ = Pressure drop when valve fully open (90°)

IC 20

The running time of the actuator per 90° depends on the required torque.
Example: any running time could be used for a butterfly valve BVG of nominal size DN 65.

The running time is reduced by a factor of 0.83 at a frequency of 60 Hz on the actuator.

IC 30

The running time changes depending on the load. It refers to the torque.

IC 40

Torque and running time are mutually independent on actuators IC 40 and IC 40S.

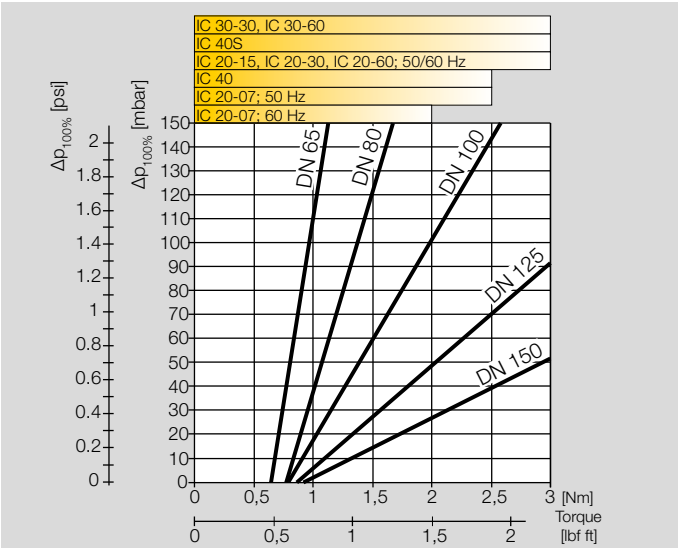

BVG, BVA

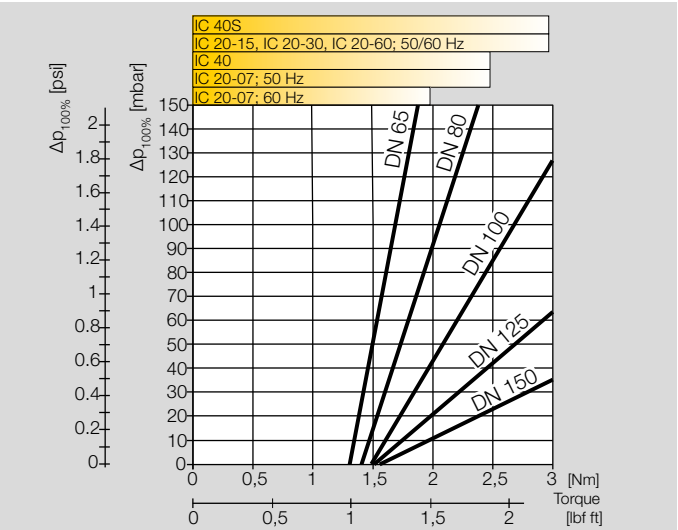

BVGF, BVAF

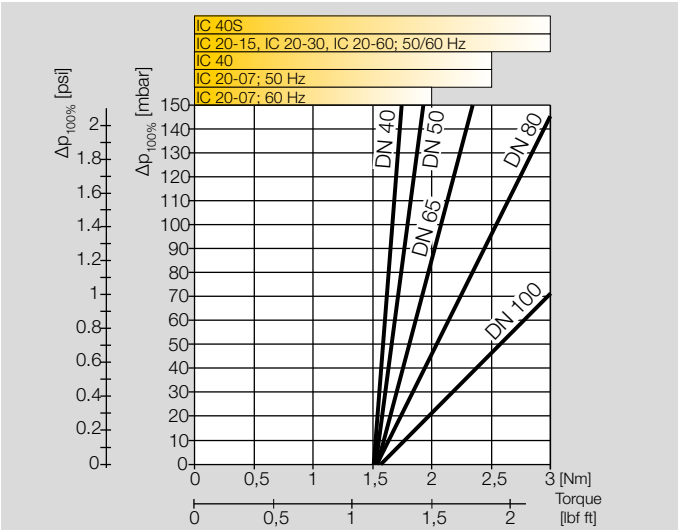

BVH, BVHR, BVHS

MB 7

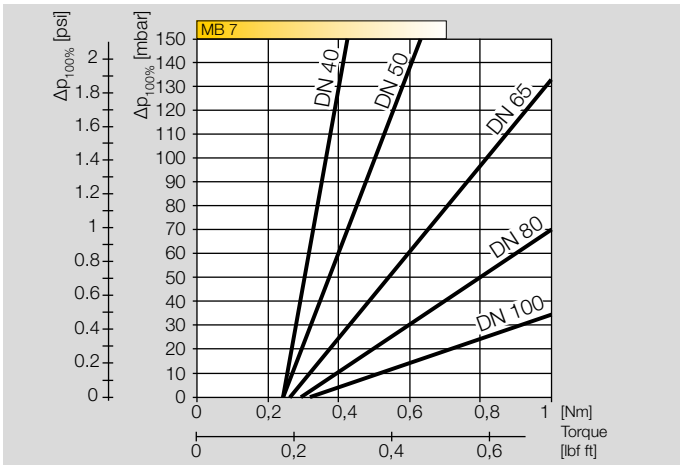

BVHM

MB 7..N:
quick opening: < 1 s,
quick closing: < 1 s.
MB 7..R:
slow opening: 2–4 s,
slow closing: 2–4 s.
MB 7..L:
slow opening: 2–4 s,
quick closing: < 1 s.

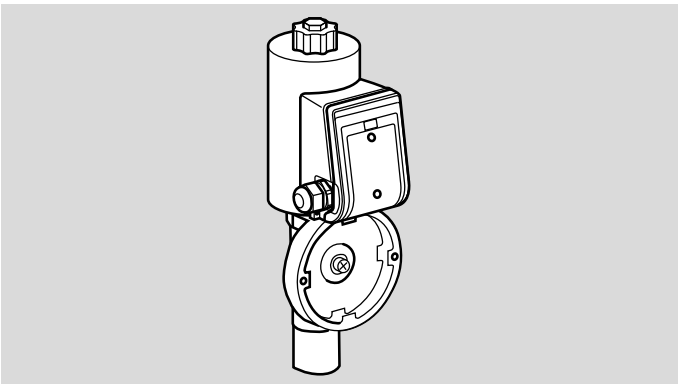

MB 7..N

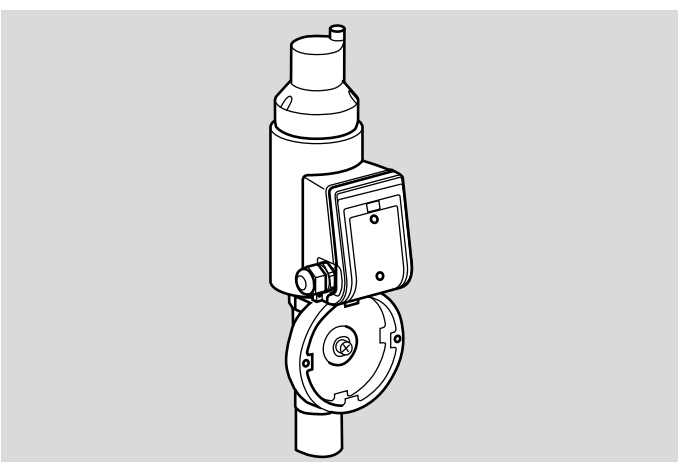

MB 7..R, MB 7..L

7 Accessories

7.1 Adapter set for BVG, BVA

If the butterfly valve is to be installed without an actuator or with an actuator other than an IC, the following attachment sets can be used.

Adapter set with square shaft

The actuator must have a square shaft end.

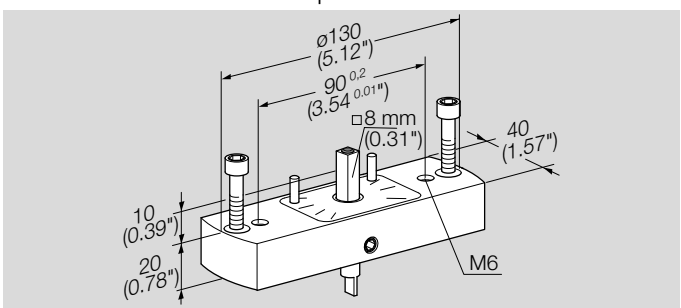

Order No.: 74921674, enclosed

Adapter set with free shaft end

The actuator must have a Ø 10 mm socket.

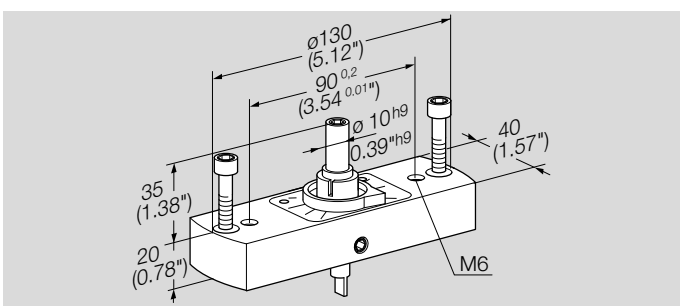

Order No.: 74921676, enclosed

Adapter set with manual adjustment

The lever can be locked in position.

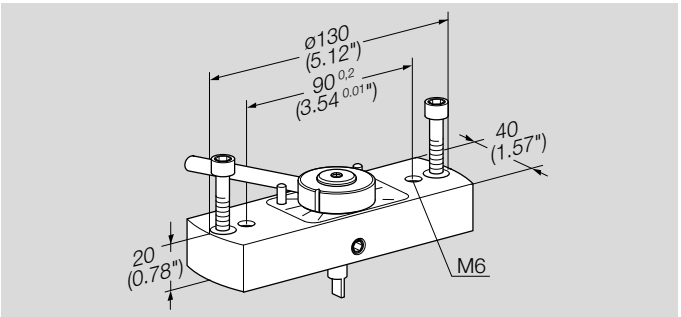

Order No.: 74921678, enclosed

7.2 Fastening set

2 x M6 x 35 set screws, for retrofitting IC 20/IC 40 to butterfly valve BVG, BVA, BVH or linear flow control VFC.

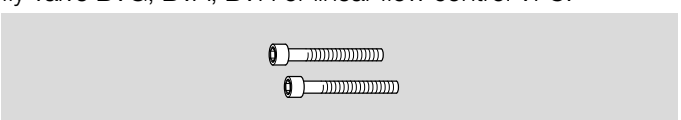

Order No.: 74921082

7.3 Adapter set IC 30 for BVA/BVG

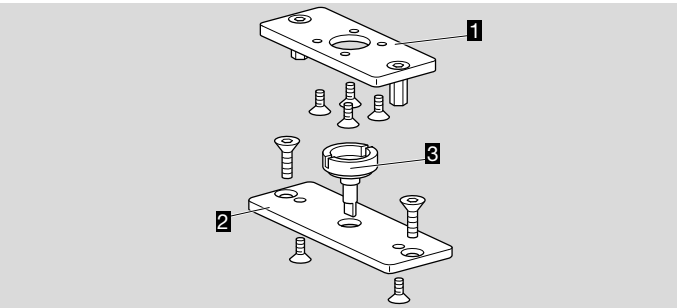

For the assembly of IC 30 and BVA, BVG.

Adapter set IC 30/BVA/BVG, Order No.: 74924996.

1 Adapter set IC 30

2 Adapter plate BVA/BVG

3 Coupling

7.4 Adapter set IC 50 for BVA/BVG

An adapter set can be supplied for the assembly of BVA/BVG and IC 50.

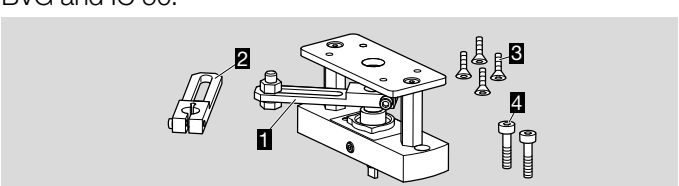

Order No.: 74926243

1 Adapter set IC 50

2 Top oblong-hole lever for actuator IC 50

3 4 x M5 countersunk screws

4 2 x M6 set screws

7.5 Heat deflector

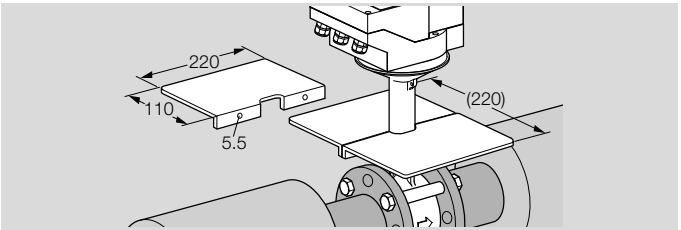

Install heat deflectors in order to protect the actuator from overheating if the medium temperature is > 250°C (482°F).

Order No.: 74921670

7.6 Fastening set for BVHM

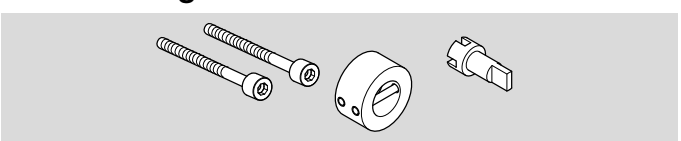

This is required to attach the solenoid actuator MB 7 to the butterfly valve BVHM. The fastening set is delivered enclosed as an additional item.

Order No.: 74922222

8 Technical data

8.1 Ambient conditions

Icing, condensation and dew in and on the unit are not permitted.

Avoid direct sunlight or radiation from red-hot surfaces on the unit. Note the maximum medium and ambient temperatures!

Avoid corrosive influences, e.g. salty ambient air or SO_2.

The unit may only be stored/installed in enclosed rooms/ buildings.

The unit is suitable for a maximum installation height of 2000 m AMSL.

Ambient temperature:
-20 to +60°C (-4 to +140°F).
BVG, BVGF: Long-term use in the upper ambient temperature range accelerates the ageing of the elastomer materials and reduces the service life (please contact manufacturer).

Transport temperature = ambient temperature.

Storage temperature: -20 to +40°C (-4 to +104°F).

This unit is not suitable for cleaning with a high-pressure cleaner and/or cleaning products.

8.2 Mechanical data

Gas type:
BVG, BVGF: natural gas, town gas, LPG, biogas (max. 0.1 %-by-vol. H_2S), hydrogen and other non-aggressive fuel gases.
BVA, BVAF: air.
BVH, BVHR, BVHM, BVHS: air and flue gas.

The gas must be clean and dry in all temperature conditions and must not contain condensate.

BVG, BVGF, BVA, BVAF

Housing material: AlSi,
valve disc: aluminium,
drive shaft: stainless steel,
seals: HNBR.

Nominal size: DN 40–150,
reduction by 2 nominal sizes possible.
BVG, BVGF: nominal sizes DN 40 to 100 available with ANSI flange and reduced by 2 nominal sizes.

Inlet pressure p_u: max. 500 mbar (7.25 psi).

Medium temperature = ambient temperature.

BVH, BVHR, BVHM, BVHS

Housing material: GGG,
valve disc: stainless steel,
drive shaft: stainless steel.

Nominal size DN 40 to 100.

Inlet pressure p_u: max. 150 mbar (2.18 psi). Pressure differential between inlet pressure p_u and outlet pressure p_d: max. 150 mbar (2.18 psi).

Medium temperature: BVH: -20 to +450°C (-4 to +840°F), BVHR: -20 to +550°C (-4 to +1020°F).

9 Dimensions

9.1 IBG/IBA (BVG/BVA + IC 20/IC 40)

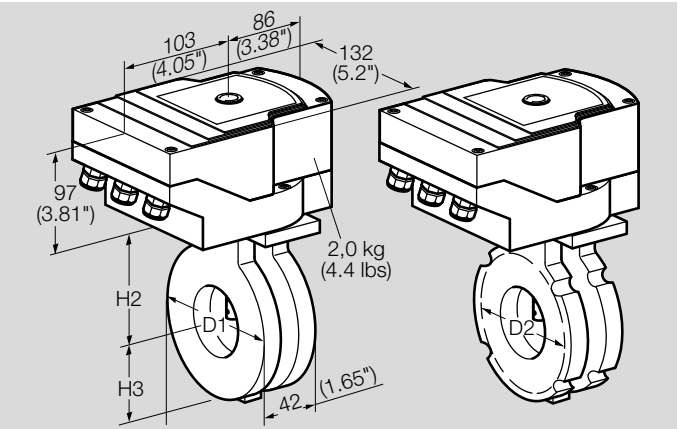

Type	H2	H3	DIN	ANSI	
	mm (inch)	mm (inch)	D1 mm (inch)	D1 mm (inch)	D2 mm (inch)
IBG/IBA 40	96 (3.78)	52 (2.04)	92 (3.62)	92 (3.62)	85.7 (3.37)
IBG/IBA 50	100 (3.94)	59 (2.32)	107 (4.21)	107 (4.21)	105 (4.13)
IBG/IBA 65	108 (4.25)	69 (2.72)	127 (5)	127 (5)	124 (4.88)
IBG/IBA 80	115 (4.53)	76 (2.99)	142 (5.59)	142 (5.59)	137 (5.39)
IBG/IBA 100	125 (4.92)	86 (3.39)	162 (6.38)	162 (6.38)	–
IBG/IBA 125	138 (5.43)	101 (3.98)	192 (7.56)	–	–
IBG/IBA 150	150 (5.9)	114 (4.49)	218 (8.58)	–	–

With full bore

Type	Weight kg (lbs)
IBG/IBA 40	2.7 (5.95)
IBG/IBA 50	2.8 (6.17)
IBG/IBA 65	3.0 (6.61)
IBG/IBA 80	3.2 (7.05)
IBG/IBA 100	3.3 (7.27)
IBG/IBA 125	3.6 (7.93)
IBG/IBA 150	3.9 (8.60)

With 1 × reduced bore

Type	Weight kg (lbs)
IBG/IBA 40/32	2.7 (5.95)
IBG/IBA 50/40	2.9 (6.39)
IBG/IBA 65/50	3.2 (7.05)
IBG/IBA 80/65	3.4 (7.49)
IBG/IBA 100/80	3.6 (7.93)
IBG/IBA 125/100	4.1 (9.04)
IBG/IBA 150/125	4.4 (9.70)

With 2 × reduced bore

Type	Weight kg (lbs)
IBG/IBA 40/25	2.8 (6.17)
IBG/IBA 50/32	3.0 (6.61)
IBG/IBA 65/40	3.2 (7.05)
IBG/IBA 80/50	3.5 (7.70)
IBG/IBA 100/65	3.8 (8.38)
IBG/IBA 125/80	4.4 (9.70)
IBG/IBA 150/100	4.9 (10.80)

9.2 IBGF/IBAF (BVGF/BVAF + IC 20/IC 40)

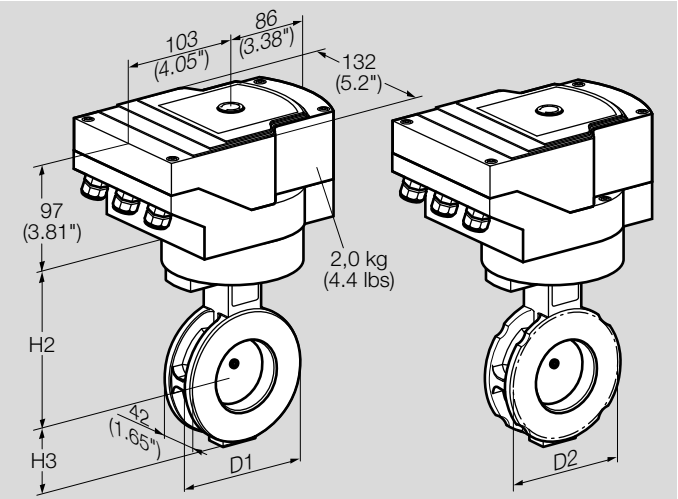

Type	H2	H3	DIN	ANSI	
	mm (inch)	mm (inch)	D1 mm (inch)	D1 mm (inch)	D2 mm (inch)
IBGF/IBAF 40	134 (5.28)	52 (2.04)	92 (3.62)	92 (3.62)	85.7 (3.37)
IBGF/IBAF 50	138 (5.43)	59 (2.32)	107 (4.21)	107 (4.21)	105 (4.13)
IBGF/IBAF 65	146 (5.74)	69 (2.72)	127 (5.00)	127 (5.00)	124 (4.88)
IBGF/IBAF 80	153 (6.02)	76 (2.99)	142 (5.59)	142 (5.59)	137 (5.39)
IBGF/IBAF 100	163 (6.41)	86 (3.39)	162 (6.38)	162 (6.38)	–
IBGF/IBAF 125	176 (6.93)	101 (3.98)	192 (7.56)	–	–
IBGF/IBAF 150	188 (7.40)	114 (4.49)	218 (8.58)	–	–

With full bore

Type	Weight kg (lbs)
IBGF/IBAF 40	3.5 (7.70)
IBGF/IBAF 50	3.6 (7.93)
IBGF/IBAF 65	3.8 (8.38)
IBGF/IBAF 80	4.0 (8.82)
IBGF/IBAF 100	4.1 (9.04)
IBGF/IBAF 125	4.4 (9.70)
IBGF/IBAF 150	4.7 (10.36)

With 1 × reduced bore

Type	Weight kg (lbs)
IBGF/IBAF 40/32	3.5 (7.70)
IBGF/IBAF 50/40	3.7 (8.16)
IBGF/IBAF 65/50	4.0 (8.82)
IBGF/IBAF 80/65	4.1 (9.04)
IBGF/IBAF 100/80	4.4 (9.70)
IBGF/IBAF 125/100	4.9 (10.80)
IBGF/IBAF 150/125	5.2 (11.46)

With 2 × reduced bore

Type	Weight kg (lbs)
IBGF/IBAF 40/25	3.6 (7.93)
IBGF/IBAF 50/32	3.8 (8.38)
IBGF/IBAF 65/40	4.0 (8.82)
IBGF/IBAF 80/50	4.3 (9.48)
IBGF/IBAF 100/65	4.6 (10.14)
IBGF/IBAF 125/80	5.2 (11.46)
IBGF/IBAF 150/100	5.7 (12.57)

9.3 BVG and BVA with IC 30

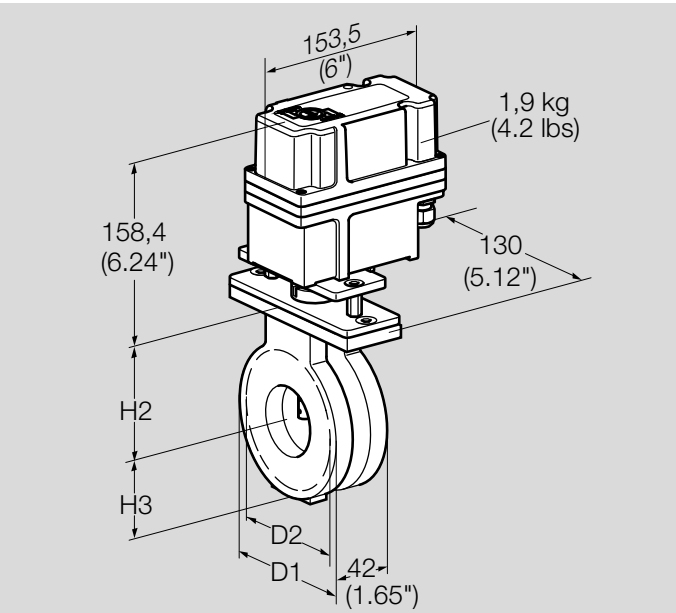

Type	H2	H3	DIN	ANSI	
	mm (inch)	mm (inch)	D1 mm (inch)	D1 mm (inch)	D2 mm (inch)
BVG/BVA 40 + IC 30	96 (3.78)	52 (2.04)	92 (3.62)	92 (3.62)	85.7 (3.37)
BVG/BVA 50 + IC 30	100 (3.94)	59 (2.32)	107 (4.21)	107 (4.21)	105 (4.13)
BVG/BVA 65 + IC 30	108 (4.25)	69 (2.72)	127 (5)	127 (5)	124 (4.88)
BVG/BVA 80 + IC 30	115 (4.53)	76 (2.99)	142 (5.59)	142 (5.59)	137 (5.39)
BVG/BVA 100 + IC 30	125 (4.92)	86 (3.39)	162 (6.38)	162 (6.38)	–

Type	H2	H3	DIN	ANSI	
	mm (inch)	mm (inch)	D1 mm (inch)	D1 mm (inch)	D2 mm (inch)
BVG/BVA 125 + IC 30	138 (5.43)	101 (3.98)	192 (7.56)	–	–
BVG/BVA 150 + IC 30	150 (5.9)	114 (4.49)	218 (8.58)	–	–

9.4 IBH/IBHS (BVH/BVHS + IC 20/IC 40)

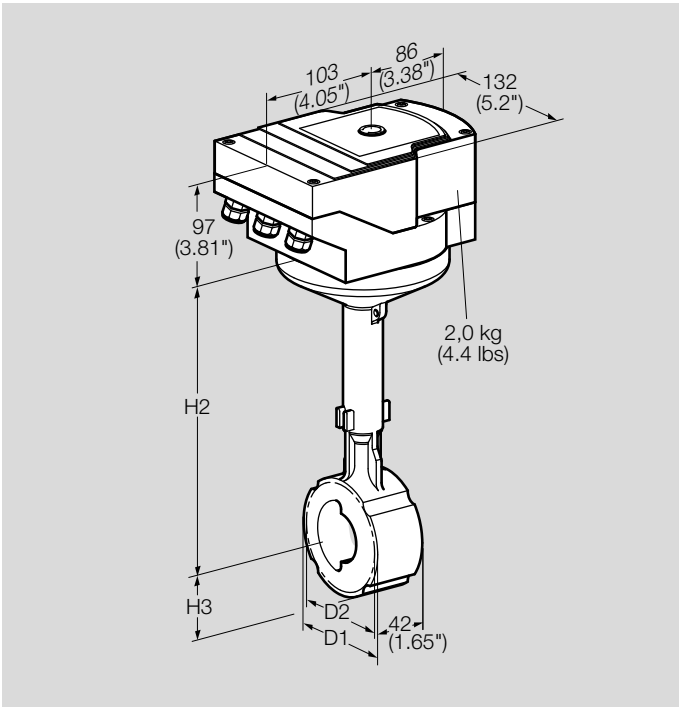

Type	H2	H3	DIN		ANSI		Weight
	mm (inch)	mm (inch)	D1 mm (inch)	D2 mm (inch)	D1 mm (inch)	D2 mm (inch)	kg (lbs)
IBH/IBHS 40	234 (9.2)	46 (1.8)	92 (3.6)	–	92 (3.6)	85.7 (3.4)	5.4 (11.9)
IBH/IBHS 50	239 (9.4)	54 (2.1)	107 (4.2)	–	107 (4.2)	105 (4.1)	5.9 (13.0)
IBH/IBHS 65	243 (9.5)	64 (2.5)	127 (5.0)	–	127 (5.0)	124 (4.9)	6.8 (15.0)
IBH/IBHS 80	254 (10)	71 (2.8)	142 (5.6)	–	142 (5.6)	137 (5.4)	7.3 (16.1)
IBH/IBHS 100	265 (10.4)	88 (3.4)	175 (6.9)	162 (6.4)	175 (6.9)	–	8.5 (18.7)

9.5 IBHR (BVHR + IC 20/IC 40)

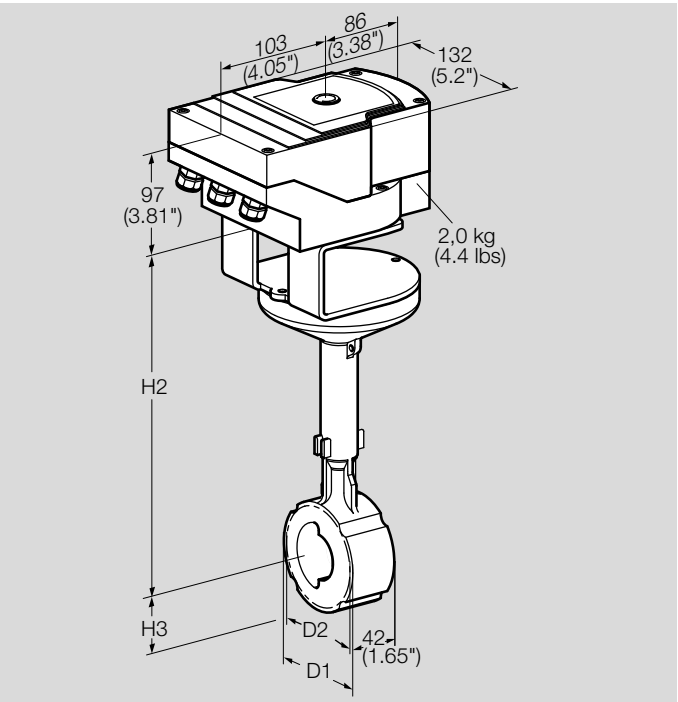

Type	H2	H3	DIN		ANSI		Weight
	mm (inch)	mm (inch)	D1 mm (inch)	D2 mm (inch)	D1 mm (inch)	D2 mm (inch)	kg (lbs)
IBHR 40	300 (11.8)	46 (1.8)	92 (3.6)	–	92 (3.6)	85.7 (3.4)	5.0 (11.0)
IBHR 50	305 (12.0)	54 (2.1)	107 (4.2)	–	107 (4.2)	105 (4.1)	5.6 (12.3)
IBHR 65	309 (12.2)	64 (2.5)	127 (5.0)	–	127 (5.0)	124 (4.9)	6.2 (13.6)
IBHR 80	320 (12.6)	71 (2.8)	142 (5.6)	–	142 (5.6)	137 (5.4)	6.7 (14.8)
IBHR 100	331 (13.0)	88 (3.4)	175 (6.9)	162 (6.4)	175 (6.9)	–	8.1 (17.7)

9.6 MB 7 + BVHM

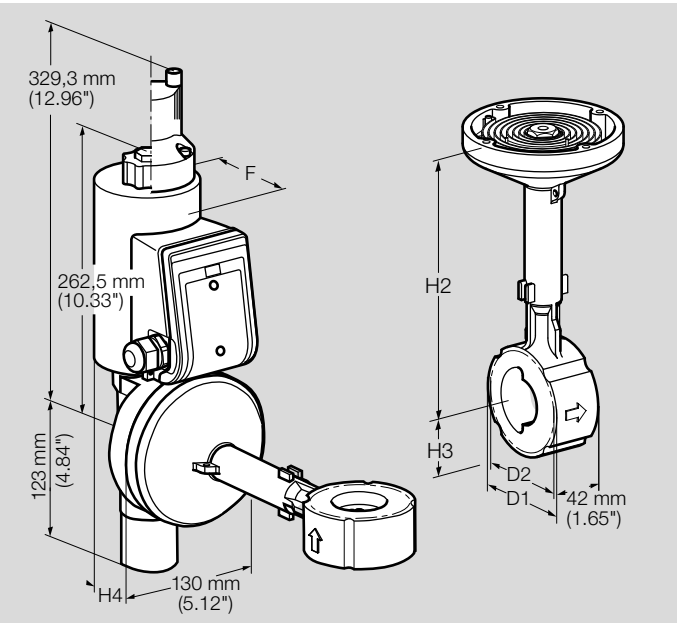

Type	H2	H3	H4	DIN		ANSI		F	Weight
	mm (inch)	mm (inch)	mm (inch)	D1 mm (inch)	D2 mm (inch)	D1 mm (inch)	D2 mm (inch)	mm (inch)	kg (lbs)
BVHM 40 + MB 7	234 (9.21)	46 (1.81)	91.5 (3.58)	92 (3.6)	–	92 (3.6)	85.7 (3.37)	92 (3.62)	11.79 (26.00)
BVHM 50 + MB 7	239 (9.40)	54 (2.12)	91.5 (3.58)	107 (4.2)	–	107 (4.2)	105 (4.13)	92 (3.62)	12.17 (26.83)
BVHM 65 + MB 7	243 (9.56)	64 (2.51)	91.5 (3.58)	127 (5.0)	–	127 (5.0)	124 (4.88)	92 (3.62)	13.05 (28.77)
BVHM 80 + MB 7	254 (10.00)	71 (2.80)	91.5 (3.58)	142 (5.6)	–	142 (5.6)	137 (5.39)	92 (3.62)	13.59 (29.96)
BVHM 100 + MB 7	265 (10.43)	88 (3.46)	91.5 (4.33)	175 (6.9)	162 (6.4)	175 (6.9)	–	92 (3.62)	14.97 (33.00)

10 Converting units

See www.adlatus.org

11 Maintenance cycles

11.1 Maintenance

The butterfly valve requires little servicing.

We recommend a function check once a year.

BVG, BVGF: check for external tightness once a year.

If operated with biogas, a tightness test and function check must be carried out every six months.

12 Glossary

12.1 Control characteristic, valve authority

In order for the butterfly valve to be able to influence the flow rate, a proportion of the pressure loss Δp from the entire system has to be caused by the butterfly valve. Taking into consideration that the overall pressure loss Δp should be kept to a minimum, a valve authority a = 0.3 is recommended for the butterfly valve.

This means that of the overall pressure loss Δp, there is a 30% drop on the fully open butterfly valve.

12.2 Interpolation (linear)

Mathematical production of interim values at equal distance to the adjacent value.

12.3 Hot air compensation

The volume of air increases with the addition of hot air. The oxygen content contained in the air decreases with every m^3. In order to maintain a constant oxygen content, additional air has to be added to the combustion gas.

12.4 Symbols in acc. with DIN EN 334/14382 and DVGW G 491

Comparison of the new and old symbols

Designation	old	new
Inlet pressure	p_e	p_u
Outlet pressure	p_a	p_d

For more information

The Honeywell Thermal Solutions family of products includes Honeywell Combustion Safety, Eclipse, Exothermics, Hauck, Kromschröder and Maxon. To learn more about our products, visit ThermalSolutions.honeywell.com or contact your Honeywell Sales Engineer.

Elster GmbH
Strotheweg 1, D-49504 Lotte
T +49 541 1214-0
hts.lotte@honeywell.com
www.kromschroeder.com

© 2023 Elster GmbH

We reserve the right to make technical modifications in the interests of progress.

BV.., IB.. · Edition 09.23 · EN